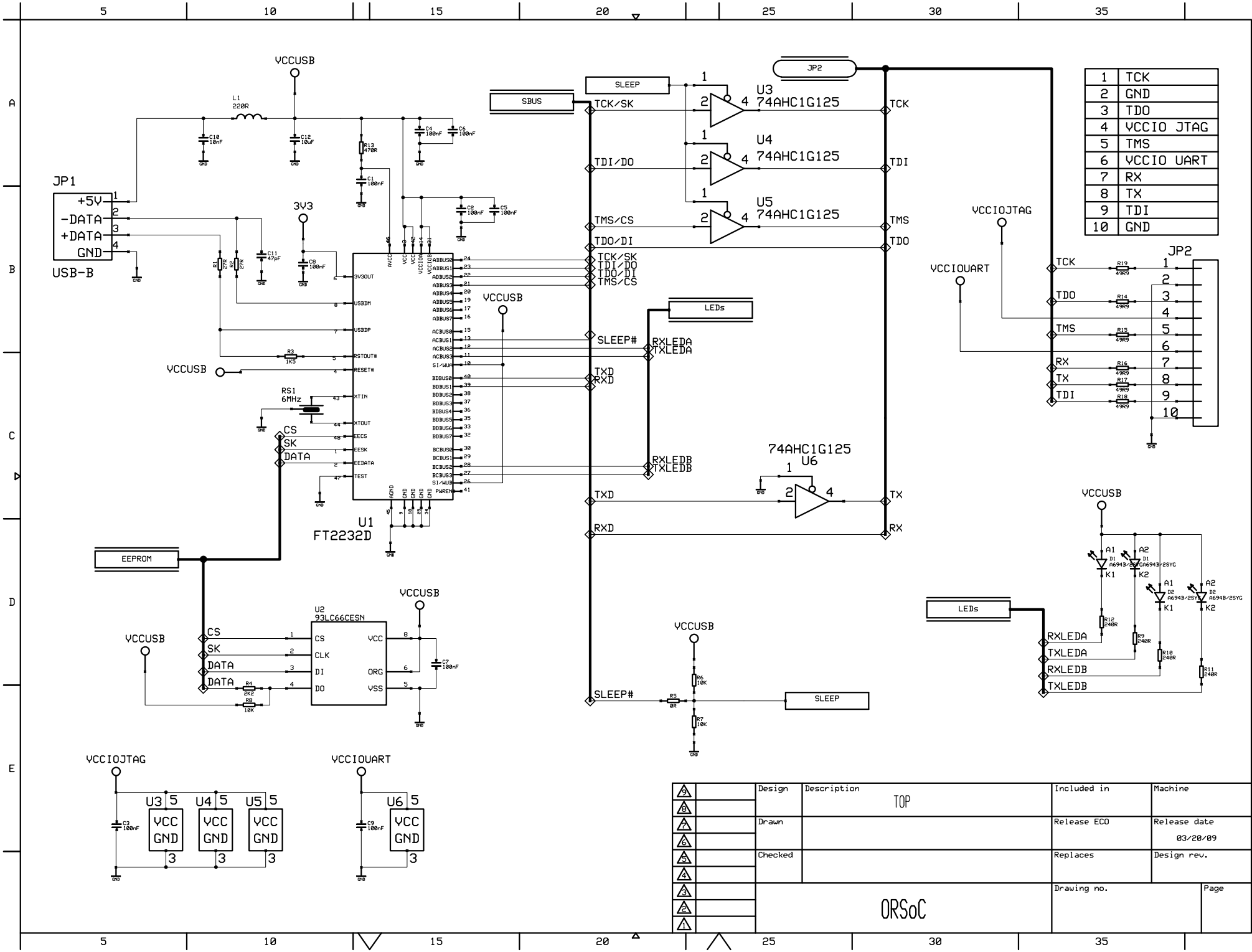

1	TCK
2	GND
3	TDO
4	VCCIO JTAG
5	TMS
6	VCCIO UART
7	RX
8	TX
9	TDI
10	GND

Design	Description TOP	Included in	Machine	
Drawn		Release ECO	Release date 03/20/09	
Checked		Replaces	Design rev.	
ORSoC		Drawing no.	Page	