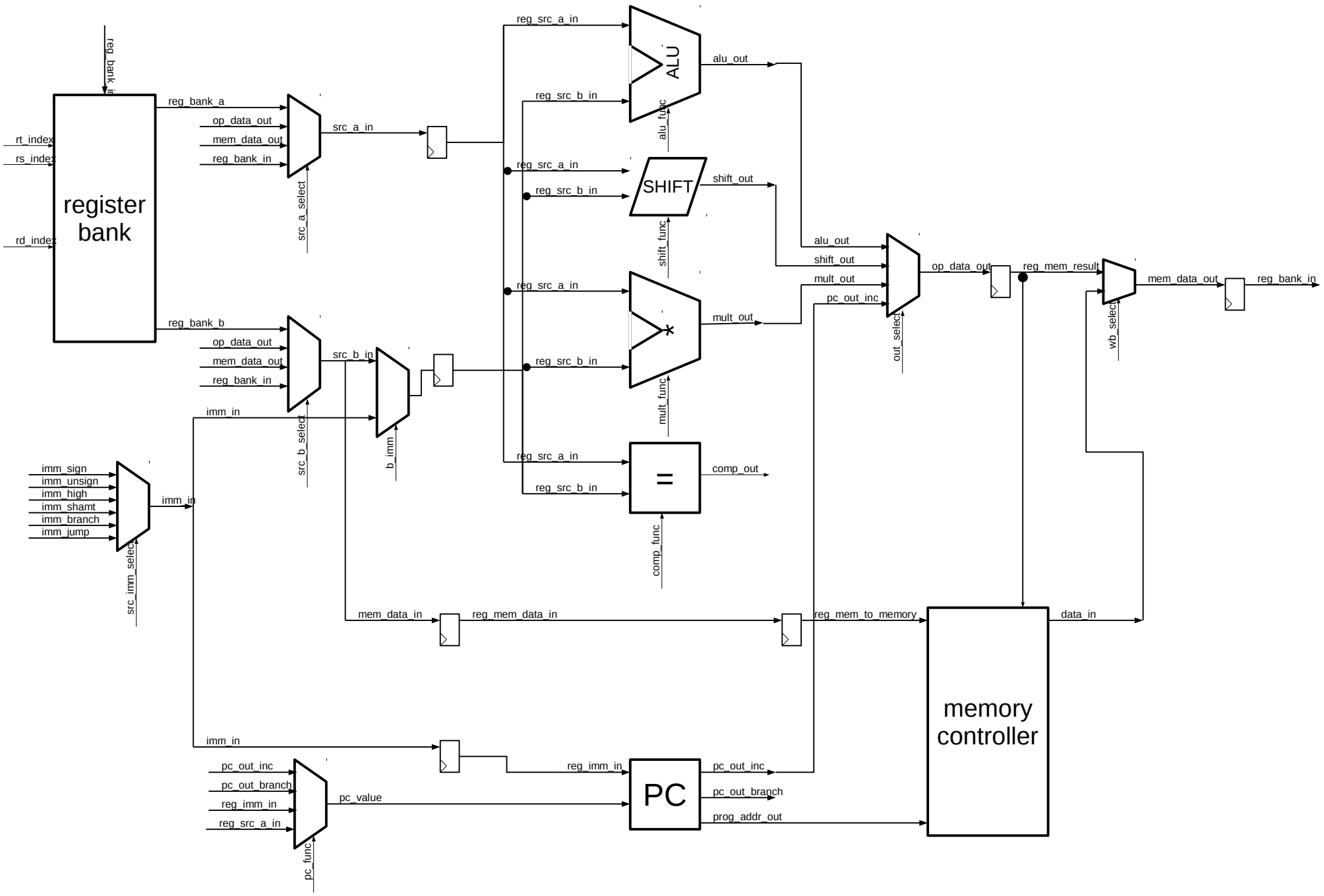
register bank
reg_bank_in
rt_index
rs_index
rd_index
reg_bank_a
op_data_out
mem_data_out
reg_bank_in
src_a_select
src_a_in
reg_bank_b
op_data_out
mem_data_out
reg_bank_in
src_b_select
src_b_in
b_imm
imm_in
imm_sign
imm_unsign
imm_high
imm_shamt
imm_branch
imm_jump
src_imm_select
imm_in
reg_src_a_in
reg_src_b_in
ALU
alu_func
alu_out
SHIFT
shift_func
shift_out
*
mult_func
mult_out
=
comp_func
comp_out
alu_out
shift_out
mult_out
pc_out_inc
out_select
op_data_out
reg_mem_result
wb_select
mem_data_out
reg_bank_in
mem_data_in
reg_mem_data_in
reg_mem_to_memory
data_in
memory controller
imm_in
reg_imm_in
PC
pc_out_inc
pc_out_branch
prog_addr_out
pc_out_inc
pc_out_branch
reg_imm_in
reg_src_a_in
pc_value
pc_func