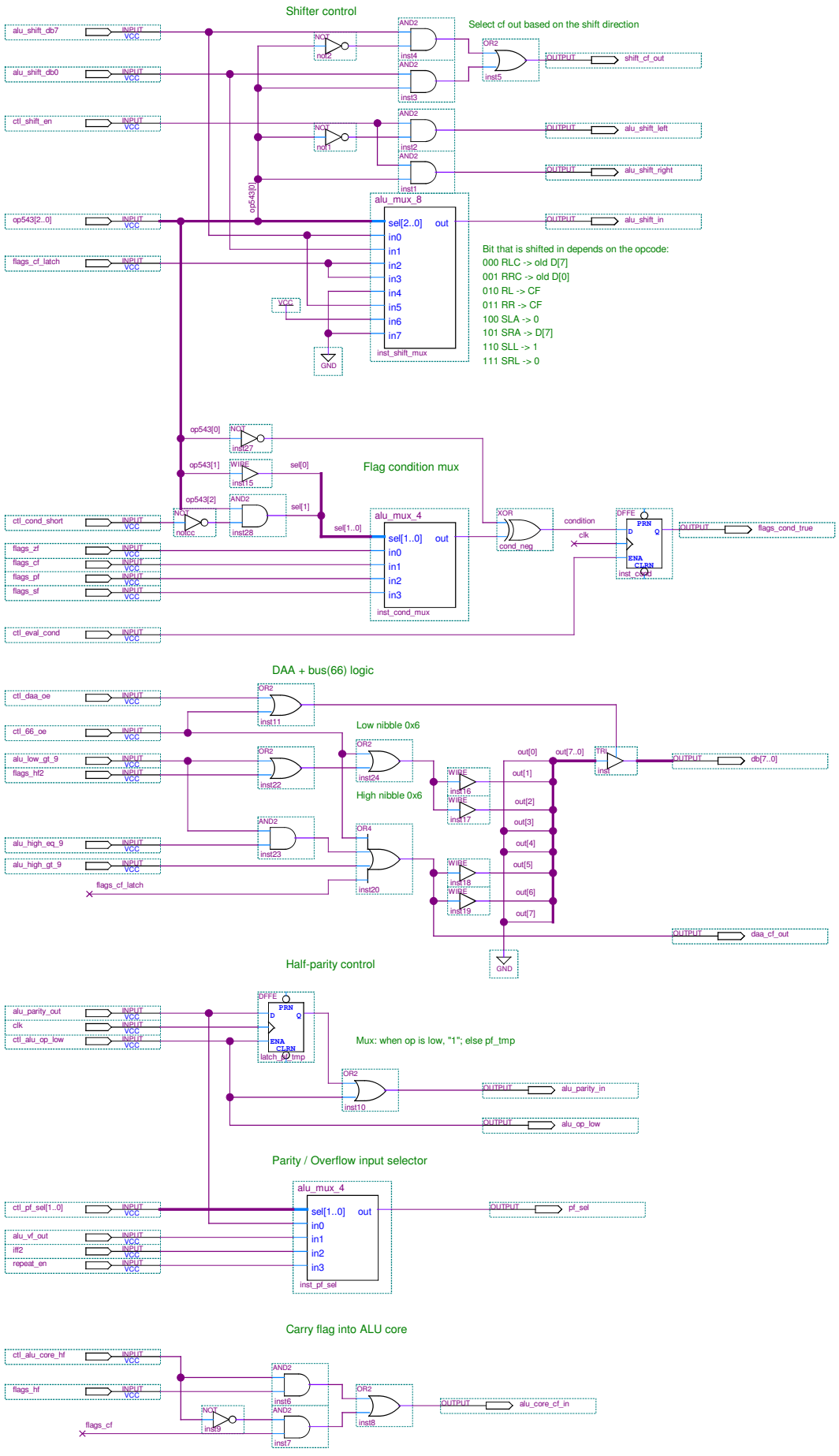

PROJECT	A-Z80	MODULE	alu_control
DESIGNER	Goran Devic		
DATE	June 28, 2014	REV	1.6

alu_control.bdf