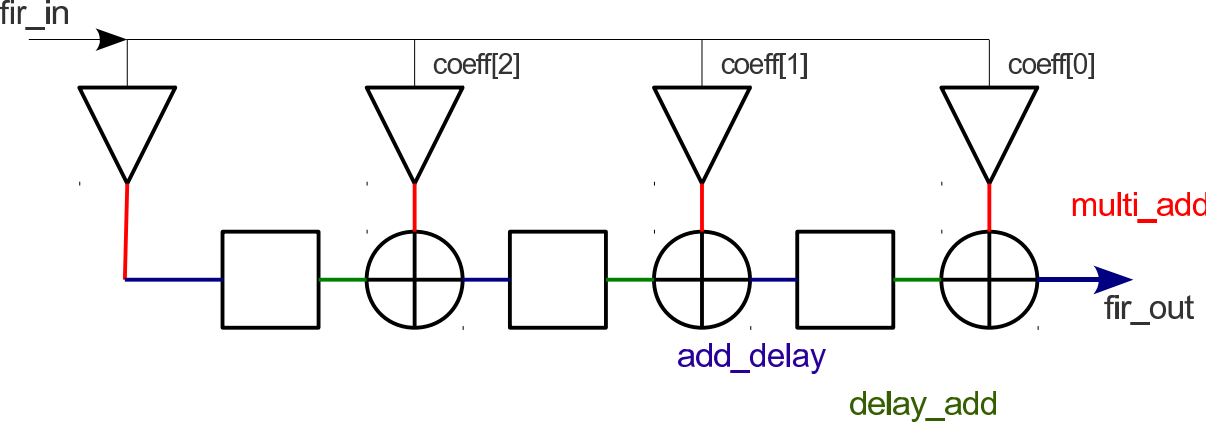

The filter construction goes from right to left