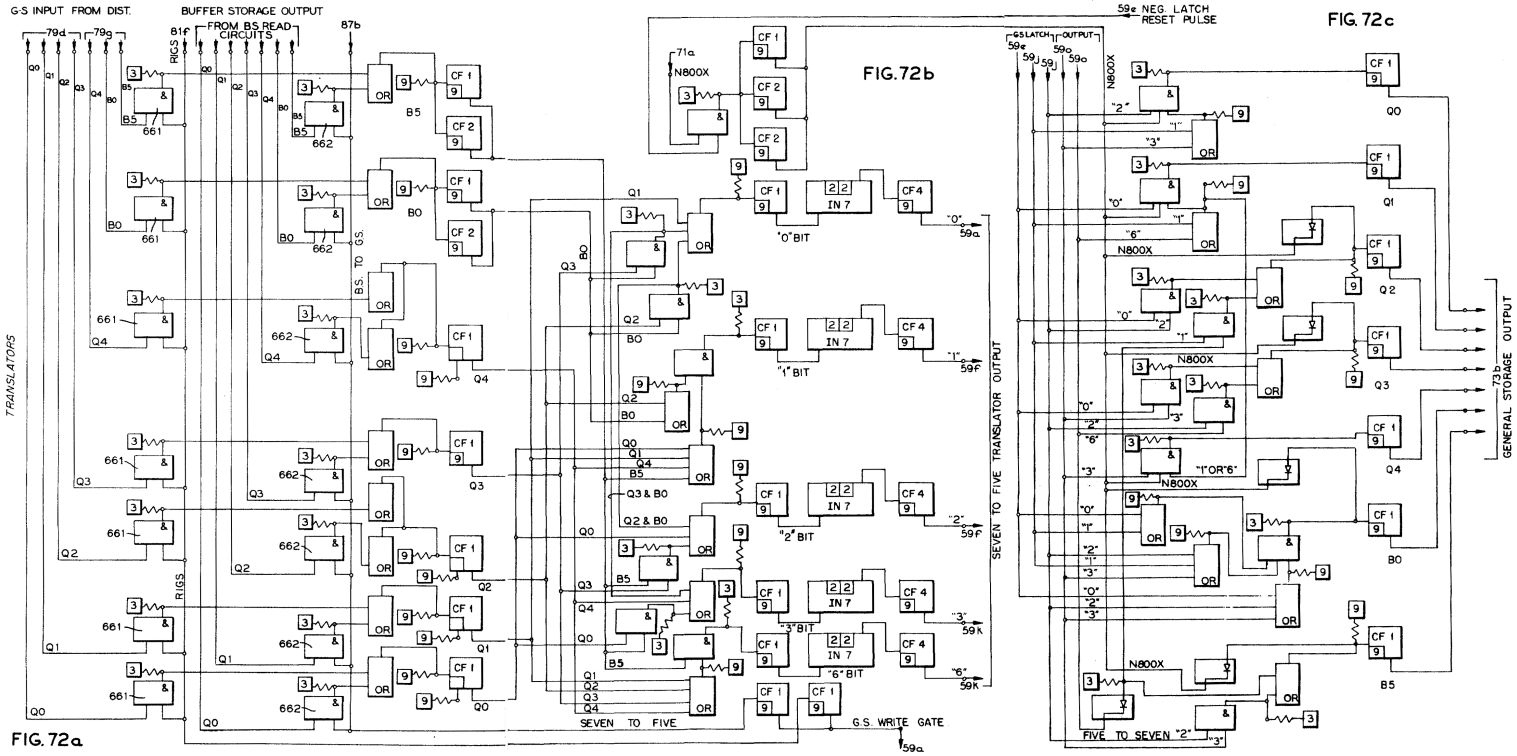
G-S INPUT FROM DIST.
BUFFER STORAGE OUTPUT
FROM BS READ CIRCUITS
TRANSLATORS
B.S. TO G.S.
R.I.G.S.
SEVEN TO FIVE
G.S. WRITE GATE
SEVEN TO FIVE TRANSLATOR OUTPUT
NEG. LATCH RESET PULSE
G.S. LATCH
OUTPUT
FIVE TO SEVEN
GENERAL STORAGE OUTPUT
"0" BIT
"1" BIT
"2" BIT
"3" BIT
"6" BIT
"1" OR "6"
N800X
IN 7
CF 1
CF 2
CF 4
OR
FIG. 72a
FIG. 72b
FIG. 72c