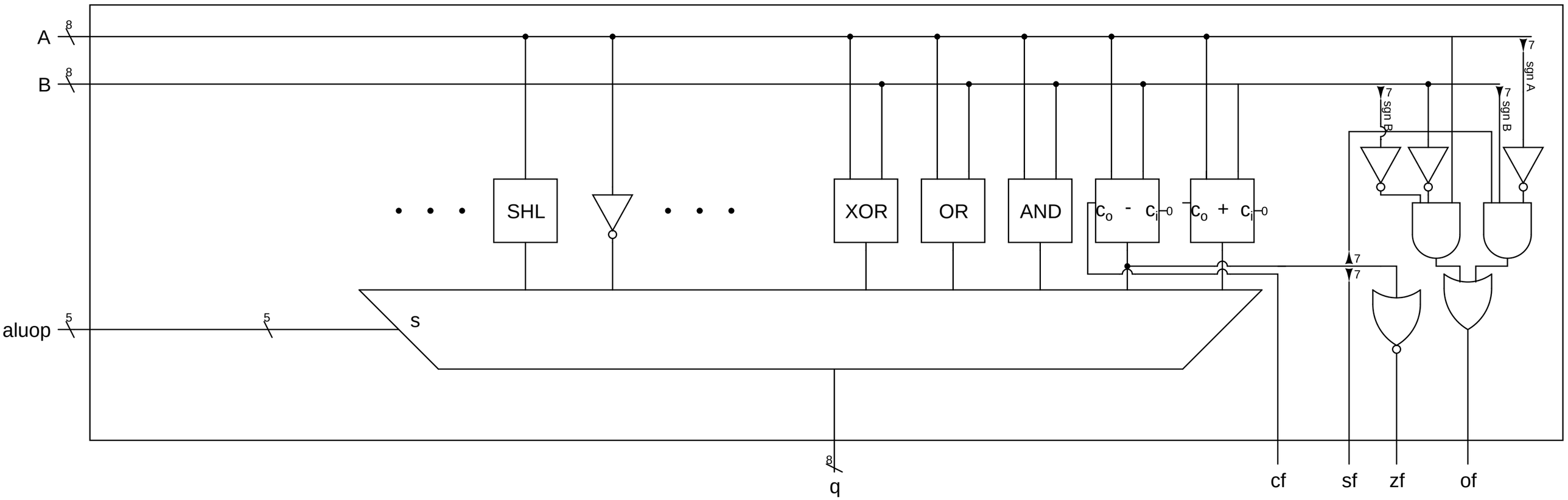
A
B
aluop
8
8
5
5
SHL
XOR
OR
AND
c_o - c_i
c_o + c_i
0
0
s
7
sgn A
7
sgn B
7
sgn B
7
7
7
8
q
cf
sf
zf
of