CPU

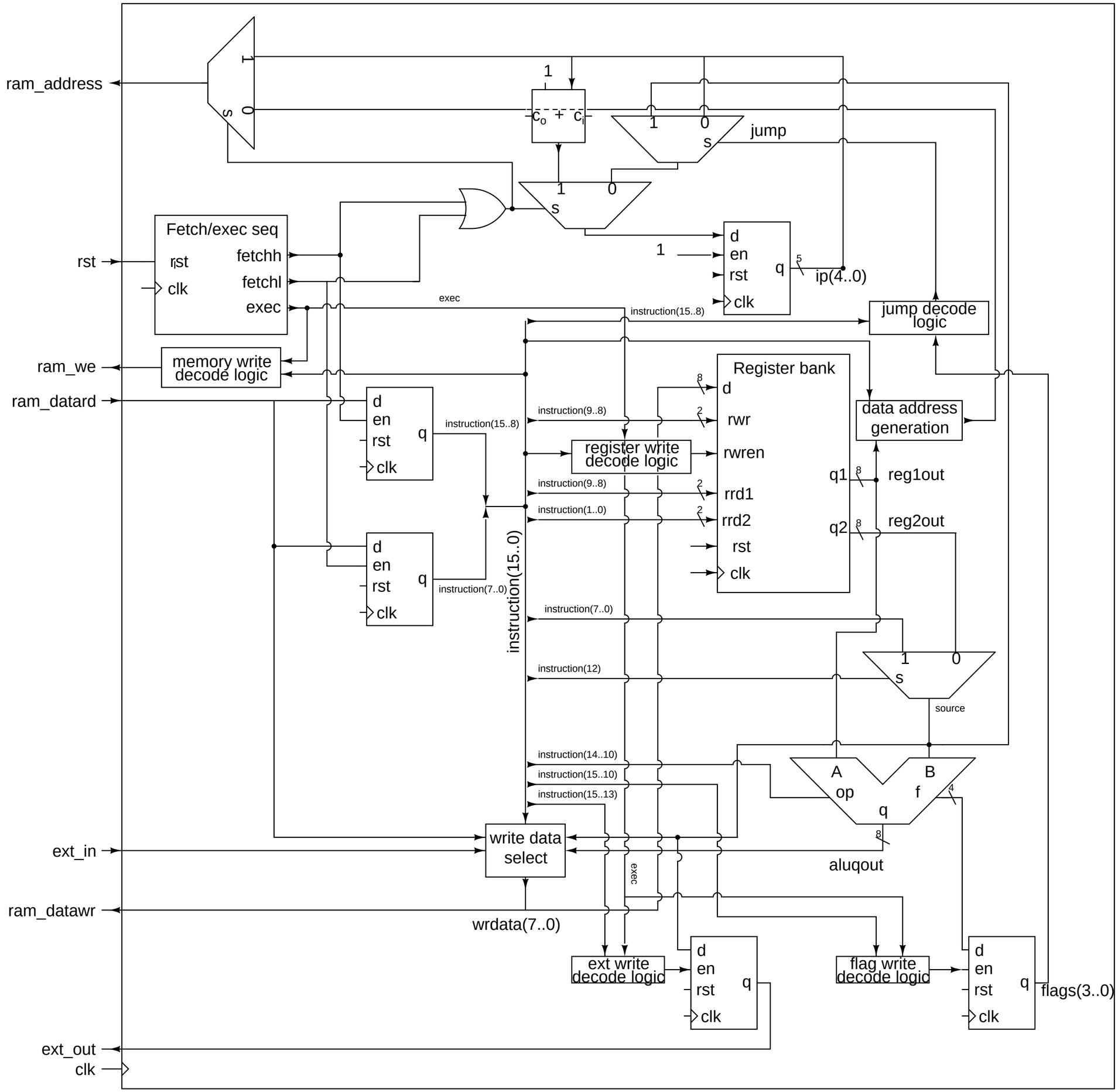

Jump decode logic

```
instr(15..13)=101 and (
  instr(11..8)=0000 or
  (instr(11..8)=0001 and zf=1) or
  (instr(11..8)=1001 and zf=0)
)
```

Register write decode logic

```
execute=1 and (
  (instr(15..13)=000 and instr(11)=0) or
  instr(15..13)=001 or
  (instr(15..13)=010 and instr(11..10) /= 01) or
  instr(15..13)=011 or
  instr(15..10)=110X01
)
```

Memory write decode logic

```
execute=1 and instr(15..10)=000X10
```

External write decode logic

```
execute=1 and instr(15..10)=110X00
```

Flag write decode logic

```
execute=1 and instr(15..10)=010X01
```

Write data select

```
wrdata =
  source when instr(15..10)=000X00
  source when instr(15..10)=000X10
  ram_datard when instr(15..10)=000X01
  aluqout when instr(15..13)=001
  aluqout when instr(15..13)=010
  aluqout when instr(15..13)=011
  ext_in when instr(15..10)=110X01
```

Data address generation

```
address =
  reg2out when instr(15..10)=000001
  instr(7..0) when instr(15..10)=000101
  reg1out when instr(15..10)=000010
  reg1out when instr(15..10)=000110
```