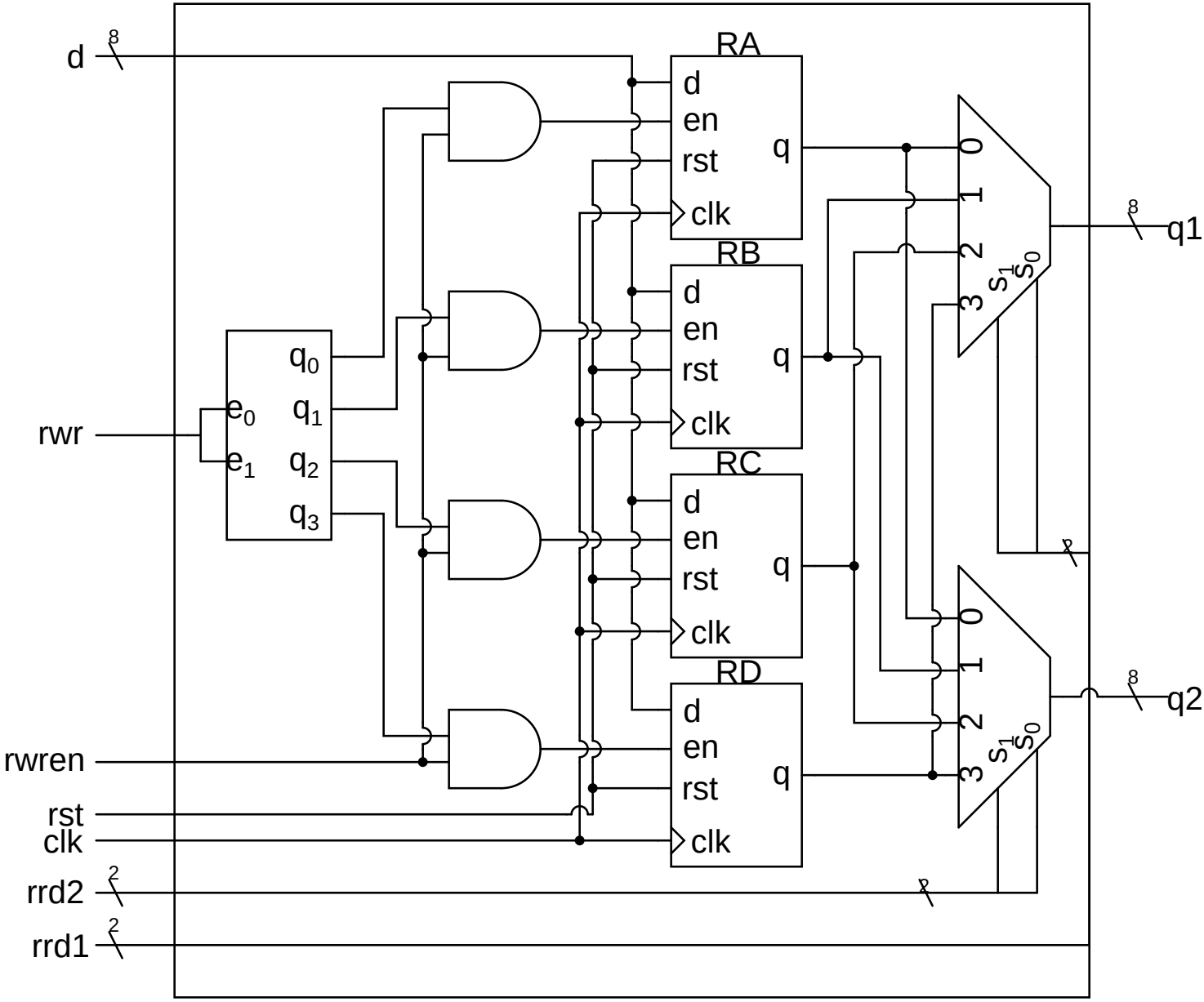Register bank