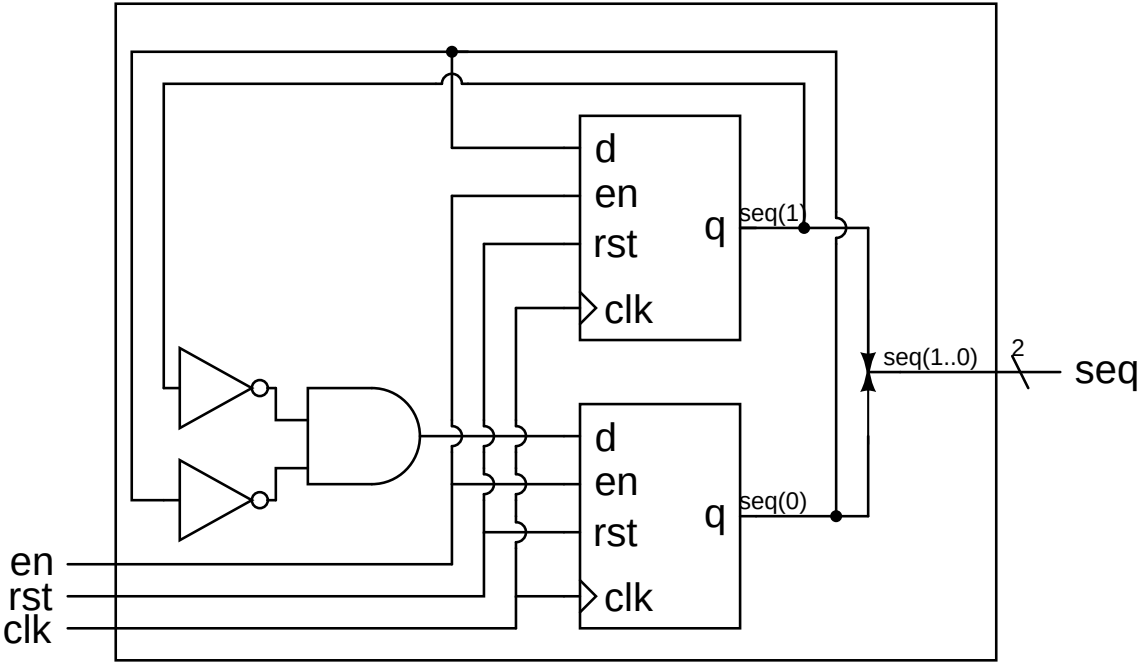Instruction fetch/execute state sequence