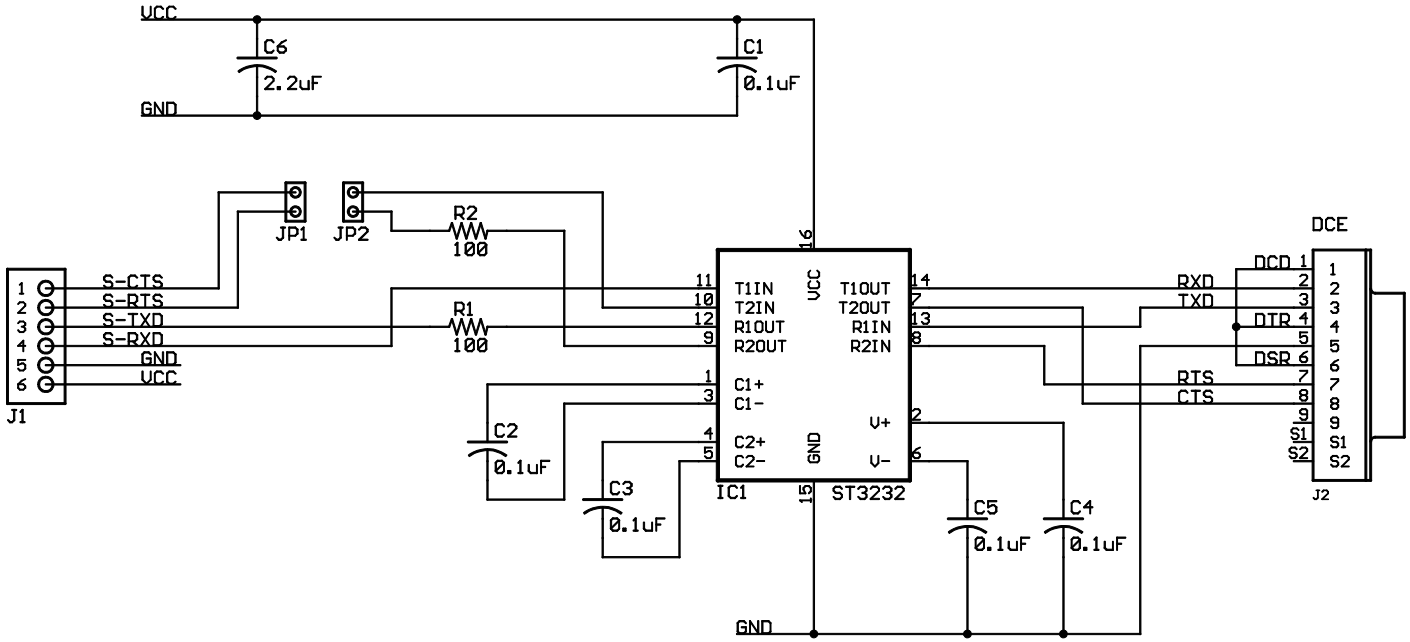

Note: This module is wired as a DCE. Connect to a DTE using a straight through cable.
Data transmitted from a DCE to a DTE is on the signal named RXD
Data transmitted from a DTE to a DCE is on the signal named TXD
J1-Pin 3 is an output. It carries data received from the DTE
J1-Pin 4 is an input. It carries data transmitted to the DTE

RS232 Peripheral Module Copyright 2004, 2007, Digilent Inc.	Engineer: NEA
TITLE: PmodRS232	Author: NEA
Document Number: 500-068	Rev: B
Release Date: 02/08/2007	Sheet:1/1

Digilent Inc.

WEEE