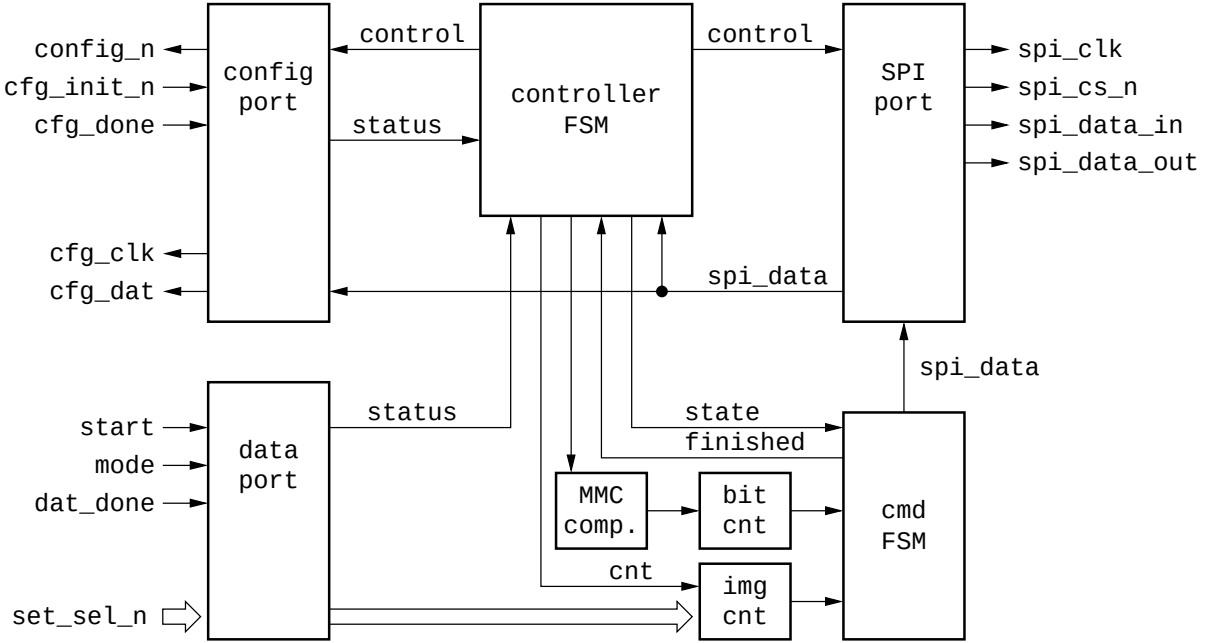
config_n
cfg_init_n
cfg_done
cfg_clk
cfg_dat
config port
control
status
controller FSM
control
SPI port
spi_clk
spi_cs_n
spi_data_in
spi_data_out
spi_data
spi_data
start
mode
dat_done
set_sel_n
data port
status
state
finished
MMC comp.
bit cnt
cnt
img cnt
cmd FSM